BASYS® Mid Faucets
EFX-280.502.0000

▶ Code Number
3324368

▶ Description
Sensor Handwashing Faucet, turbine powered with battery backup, double-infrared sensor activated for pre-tempered or hot and cold water operation. All serviceable components above deck for easy installation and maintenance.

▶ Flow Rates
1.5 gpm / 5.7 Lpm – Aerated

▶ Faucet Specifications
Turbine powered, sensor-activated, electronic, chrome plated die cast body, handwashing faucet with the following features:

- All serviceable components above deck
- One tool service
- All wetted components to be stainless steel, engineered thermoplastic, EPDM, and copper or copper alloy
- Solenoid housed in removable carrier that includes supply strainer, serviceable from above deck
- Mechanical mixing, integral to spout, optional
- Turbine Energy Harvesting
- Vandal resistant spray insert, key housed inside faucet body
- All electronics sealed to IP-67
- Gold plated electrical contacts
- Above deck individual diagnostic indicators for battery life, solenoid condition, and power up mode
- Flexible, high pressure supply hoses, 3/8" compression connections
- Bi-stable magnetic solenoid
- Double infrared sensors with automatic setting feature
- Single hole installation
- Includes all mounting hardware
- Selectable Sloan programmable line purge mode eliminates stagnant water
- Operates from 1 to 125 psi
- Adjustable run time from 0-3600 seconds (Factory set at 10 second maximum run time upon continuous detection)

▶ Variations
ISM - Integral Side Mixer

▶ CALGreen
This BASYS faucet with a 10-second cycle uses 0.083 gallons of water at 0.5 gallons per minute (exceeds minimum CALGreen requirements) or 0.25 gallons of water at 1.5 gallons per minute, depending upon desired flow rate. Additionally, this BASYS faucet is Sloan reprogrammable to use 0.175 gallons of water at 1.5 gallons per minute with a 7-second cycle (exceeds minimum CALGreen requirements).

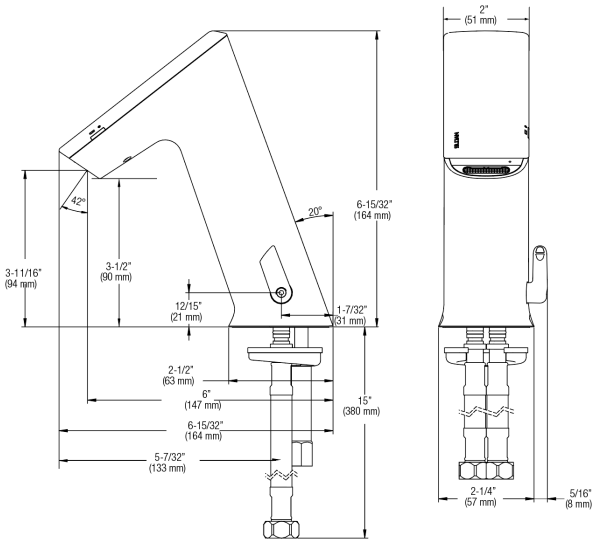

▶ Legislative Compliance
Federal Reduction of Lead in Drinking Water Act Law 111-380 (contains no more than 0.25% weighted average lead content), Section 116875 of the California Health & Safety Code, and Vermont Lead Reduction Law (Vermont Act 193).

▶ Compliance & Certifications
IAPMO/cUPC, UL (adapters), CE (adapters), Commonwealth of Massachusetts

ASME A112.18.1/CSA B125.1, NSF 372, ANSI/UL 1951, ICC/ANSI 117.1

UPC, IPC, NPC Canada, California Green Building Code (CALGreen), City of Los Angeles Water Efficiency Ordinance ASME A112.18.1/CSA B125.1, NSF 372, ANSI/UL 1951, ICC/ANSI 117.1

CEC Compliant

LOW-LEAD UPC C ®

0.25 GPC

This space for Architect/Engineer Approval

SLOAN 10500 SEYMOUR AVE. ● FRANKLIN PARK, ● IL. 60131
Ph: 1-800-9-VALVE-9 or 1-847-671-4300 ● Fax: 1-800-447-8329 or 1-847-671-4380 ● http://www.sloan.com

▶ Electrical Specifications

- Control Circuit – 6.75 VDC
- Power Supplies – 6 VDC Alkaline Battery Pack
- Battery Life – 3-years under worst case conditions of 8,000 cycles per month and high water pressure without power harvesting. Power harvesting should extend service life of batteries.
- Sensor Range – Factory Setting: 4"- 5" (102-127 mm) Nominal
  Range Adjustment: 1"- 6" (25-150 mm) Nominal

Model Creation Guide (customize your faucet features below)

EFX -	2	8	0	.		0		.	0		0	
	Digit 1	Digit 2	Digit 3	Digit 4	Digit 5	Digit 6			Digit 7	Digit 8	Digit 9	Digit 10
Series	Body Type	Power Type	Crown Type	Mixer Type	Sensing Type	Flow Rate			Battery Type	Base Plate	Adapter	Drain Pop-Up
EFX	2 = Mid IR	8 = Turbine	0 = Bowed	0 = None	0 = Active IR	0 = 0.5 gpm Multi-Lam			0 = Alkaline	0 = None	0 = None	0 = No
				1 = BDM		2 = 1.5 gpm Aerated				1 = 4"		1 = Yes
				2 = BDT		3 = 1.5 gpm Laminar				2 = 8"		
				5 = ISM								

EFX-280.00X.0X0X Faucet
with Single Line Water Supply

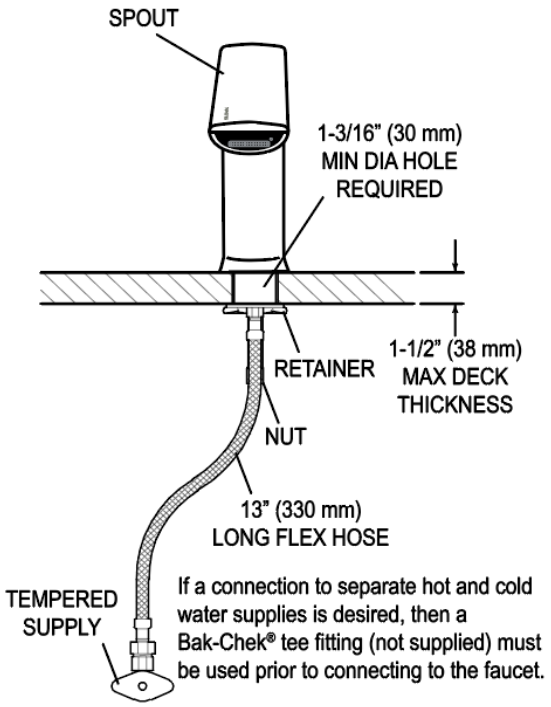
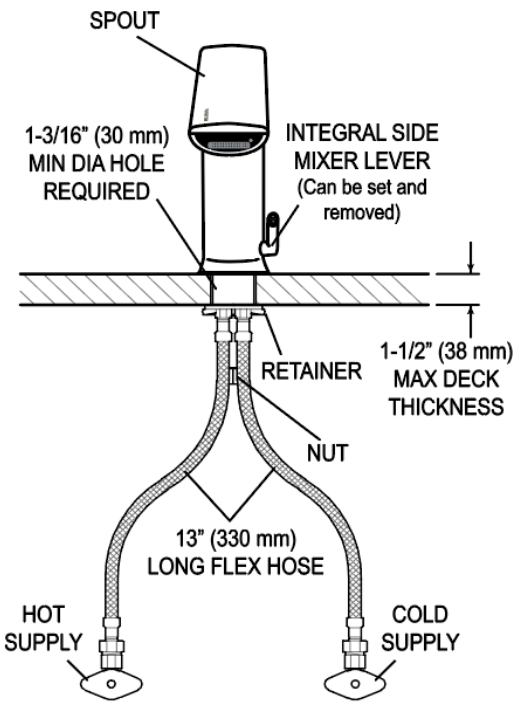
EFX-280.50X.0X0X Faucet
with Hot & Cold Water Supply