BASYS® Mid Faucets
EFX-250.503.0100

▶ Code Number
3324399

▶ Flow Rate Options (Digit 6)
1.5 gpm/5.7 Lpm Laminar Stream

▶ Description
Battery powered, infrared, sensor activated, electronic, chrome plated die cast body, hand washing faucet for pre-tempered or hot and cold water operation.

▶ Specifications
Battery Powered, Sensor Activated, Electronic, Chrome Plated Die Cast Body, Hand Washing Faucet with the following features:

- All serviceable components above deck
- One tool service
- All wetted components to be stainless steel, engineered thermoplastic, EPDM, and copper or copper alloy
- Solenoid housed in removable carrier that includes supply strainer
- Integral water supply shut off
- Supply strainer serviceable from above deck
- Vandal resistant spray insert, key housed inside faucet body
- All electronics sealed to IP-67
- Gold plated electrical contacts
- Above deck individual diagnostic indicators for battery life, solenoid condition, and power up mode
- Flexible, high pressure supply hoses, 3/8" compression connections
- ISM mechanical mixing, integral to spout
- Four (4) "AA" alkaline batteries
- Double infrared sensors with automatic setting feature
- Single hole installation
- Includes all mounting hardware
- Line purge mode, eliminates stagnant water
- Adjustable time-outs
- Faucet can be configured to add solar and/or LCD display
- 4" Trim Plate
- Bi-stable Magnetic Solenoid Valve

▶ Variations
ISM - Integral Side Mixer

4" Trim Plate

▶ Options (Ordered Separately)
- Splitter (included in hardwire less adapter)
- 11-13/16" Extension Cable
- 47-1/4" Extension Cable
- 126" Extension Cable
- Thermostatic Mixer, Below Deck

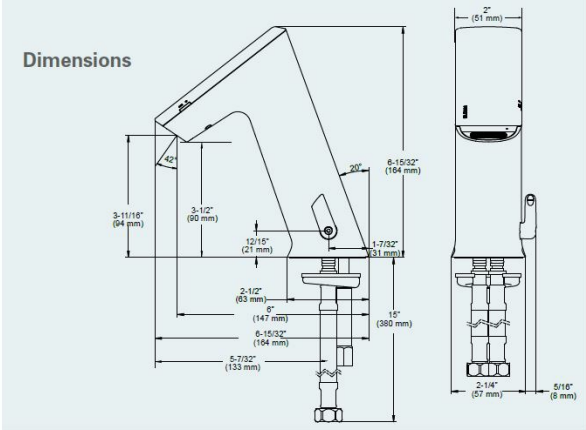

▶ Compliance & Certifications
ASME A112.18.1/CSA B125.1, NSF 372, ANSI/UL 1951, ICC/ANSI 117.1

CEC Compliant

0.25 GPC

CALGreen

LOW-LEAD UPC C ®

This space for Architect/Engineer Approval

SLOAN 10500 SEYMOUR AVE. ● FRANKLIN PARK, ● IL. 60131
Ph: 1-800-9-VALVE-9 or 1-847-671-4300 ● Fax: 1-800-447-8329 or 1-847-671-4380 ● http://www.sloan.com

▶ Time Out Setting
30 seconds — Maximum time faucet will run upon continuous detection

▶ Control Circuit
6.75 VDC

▶ Sensor Range
Nominal: 4" - 5" (102 mm - 127 mm)

Faucet Adaptive Self-adjustment Range: 2"-14" (51 mm -356 mm) nominal

▶ Battery Life
3-years under worst case conditions of 8,000 cycles per month and high water pressure. Optional power harvesting may extend service life of batteries to equal the shelf life.

▶ Special Finishes
Brushed Stainless (PVD finish)

▶ ROUGH-IN

EFX-250.00X.XXXX
Faucet with Single Line Water Supply

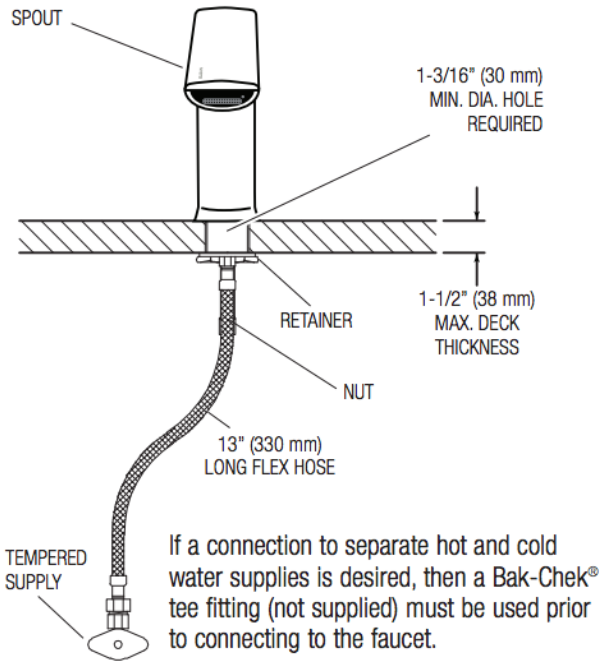

If a connection to separate hot and cold water supplies is desired, then a Bak-Chek® tee fitting (not supplied) must be used prior to connecting to the faucet.

EFX-250.50X.XXXX
Faucet with Hot and Cold Water Supply

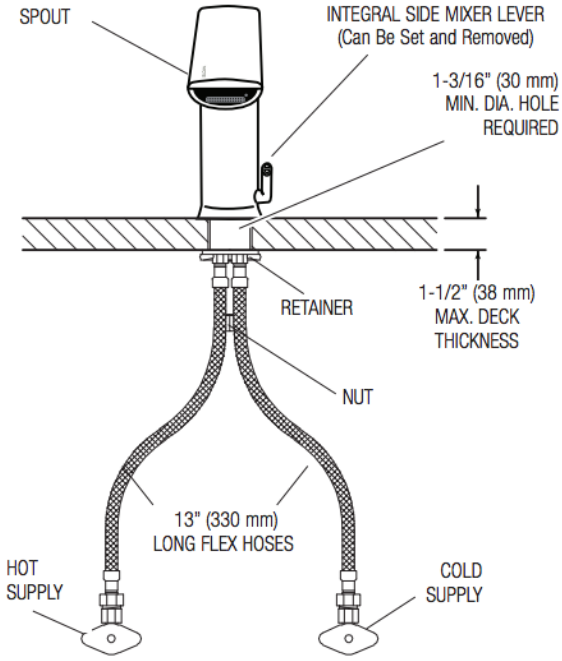

When the BASYS Series faucet is installed on a sink that has three (3) hole punchings, a Base Plate should be used.
Base Plates should be specified at time of order.

EFX-20 – 4" Centerset

EFX-26 – 8" Centerset