EFX-300-8-PLG-ISM-CP-1.5GPM-IR-FCT

(General Model Name: EFX300.502.0210)

CODE NUMBER

3324330

DESCRIPTION

8" Trim Plate, Plug Adapter Power Supply, Integrated Side Mixer, Polished Chrome Finish, 1.5 gpm, Aerated (installed) or Laminar (in box) Spray, Infrared Sensor, BASYS® Hardwired-Powered Deck-Mounted Low Body Faucet.

DETAILS

- Flow Rate: 1.5 gpm (6 Lpm) (1.5GPM)
- Spray Type: Aerated (installed) or Laminar (in box)
- Sensor Type: Infrared (IR)
- Mounting Type: Single Hole
- Trim Plate: 8" (203mm) (8)
- Power Supply: Plug Adapter (PLG)
- Temperature Mixer: Integrated Side Mixer (ISM)
- Finish: Polished Chrome (CP)
- Factory Default Timeout: 10s
- Factory Default GPC: 0.75

FEATURES

Commercial Grade, ADA Compliant, Electronic, Sensor-Activated, Die-CastMetal Hand Washing Faucet with the following features:

- One tool service
- Solenoid housed in removable carrier that includes supply strainer
- Integral water supply shut off
- Vandal resistant spray insert, key housed inside faucet body
- All electronics sealed to IP-82
- Gold plated electrical contacts
- Above deck individual diagnostic indicators for battery life, solenoid condition, and power-up mode
- Flexible, high pressure supply hose, 3/8” compression connections
- Bi-stable magnetic solenoid
- Four (4) “AA” alkaline batteries
- Double infrared sensors with automatic setting feature
- Includes all mounting hardware
- Standard Bowed Crown

ELECTRICAL SPECIFICATIONS

- Battery Life: 3 years 8,000 cycles/month
  - Optional power harvesting significantly extends service life
- Self-Adjustment Range: 0" (0mm)
- Sensor Range: 0" (0mm)
- Timeout Adjustment Settings: 10s

VIDEOS

- BASYS® Faucet Installation and Features
- BASYS® Faucet Installation Low Height Model

Variations not shown: Integrated Side Mixer and 8" Trim Plate

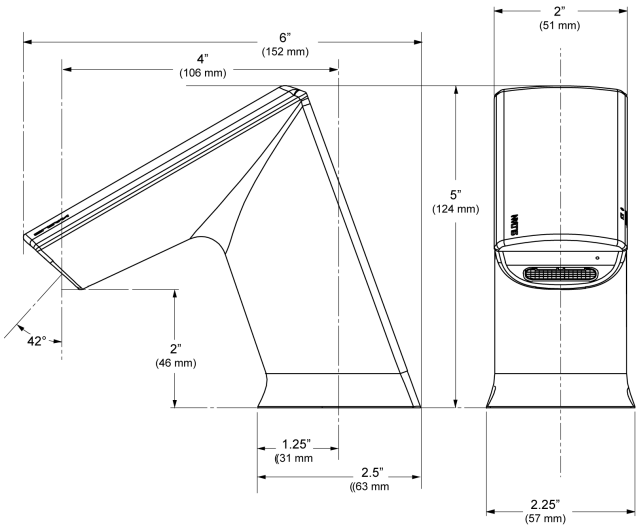

COMPLIANCES & CERTIFICATIONS

(ADA Compliant, ASME A112.18.1 Compliant, CEC Compliant, cUPC Certified, cUPC Low Lead Compliant, Proposition 65, TAS, UPC Certified, UPC Low Lead Compliant)

RECOMMENDED SPECIFICATION

Sloan BASYS Model No. EFX-300-8-PLG-ISM-CP-1.5GPM-AER-IR-FCT Infrared Sensor Activated Electronic Handwashing Faucet for pretempered or hot/cold water supplies. Product to have double infrared sensors with automatic setting feature. Solenoid valve housed in removable carrier that closes water supply upon removal eliminating, need to access control stops. Solenoid carrier includes strainer for easy above deck service.

Sloan 10500 Seymour Ave, Franklin Park, IL 60131
Phone: 800.982.5839 • Fax: 800.447.8329 • sloan.com

DOWNLOADS

- EFX 3Xx/6Xx Active IR Installation Instructions
- EFX 3Xx/6Xx Active IR (SP) Installation Instructions
- EFX 3Xx/6Xx (SP) Installation Instructions
- EFX 3Xx/6Xx Capacitance Installation Instructions
- Trim Plate Guide
- IR FAQs Repair and Maintenance Guide
- IR FAQs SP Repair and Maintenance Guide
- BASYS EFX-300 Series IR Repair and Maintenance Guide
- EFX-3XX (Capacitance) Repair and Maintenance Guide
- Additional Downloads

Thermostatic mixer ordered separately to comply with ASSE 1070 requirements. The product shall be tested and certified to industry standards: ASME A112.18.1M, CSA B125.1, California Health and Safety Code 116875

NOTES

All information contained within this document subject to change without notice.

Looking for other variations of the EFX-300 product? View the general spec sheet with all options.

Find a matching soap dispenser for this faucet.
Find a compatible sink for this faucet.

WARRANTY

3 Year

ROUGH-IN

EFX-300.00X.0X1X Faucet
with Single Line Water Supply

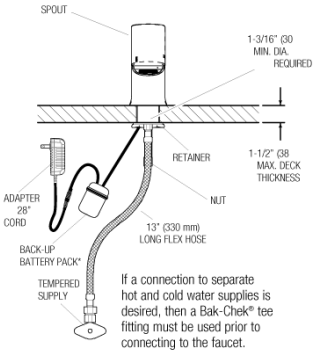

EFX-300.50X.0X1X Faucet
with Hot & Cold Water Supply

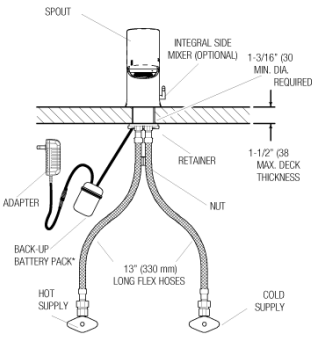

EFX-300.X0X.0X1X Faucet
with Hot & Cold Water Supply

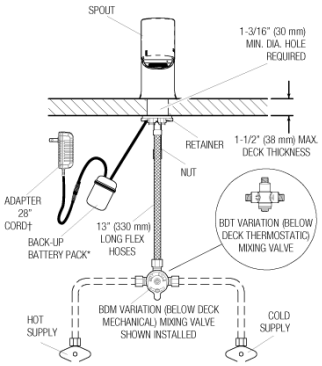

Electrical Connection for up to 6 Faucets
Can combine up to six (6) faucets using one adapter

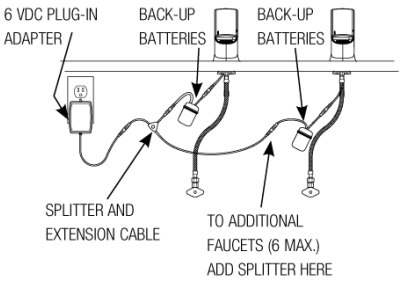

Sloan 10500 Seymour Ave, Franklin Park, IL 60131
Phone: 800.982.5839 • Fax: 800.447.8329 • sloan.com