CODE NUMBER

2102469

DESCRIPTION

Vitreous China Wall-Mounted Water Closet.

DETAILS

- Flush Volume: 1.1–1.6 gpf (4.2–6.0 Lpf)
- Flush volume determined by the flushometer used with the fixture
- Rim Height: 13 ¼"–17" (337–432mm)
- Nominal Dimensions: 26 183/250" × 15 63/500" × 16 183/250" (679 × 384 × 425mm)

FEATURES

- White Vitreous China
- Elongated bowl
- Wall mounted, wall outlet
- Siphon jet flushing action achieves 1000g Map score when used with any Sloan flushometer
- Static load rating of 750 lbs (see Notes)
- Water spot area: 10⅛" x 9⅜" (26 cm x 24 cm)
- 1½ I.P.S. rear spud inlet
- 2⅛" fully glazed trapway
- Closet bolts and caps included
- Toilet seat not included
- Static load rating of 750 lbs. (See Notes)

RECOMMENDED SEATS

- Bemis - 1955CT/1955SSCT & 2155CT/2155SSCT
- Church - 295CT/295SSCT & 2155CT/2155SSCT

PLUMBING SYSTEM REQUIREMENTS

- Minimum Flowing Pressure: 25 PSI (172 kPa)
- Maximum Static Pressure: 80 PSI (552 kPa)
- Minimum Flow Rate: 25 gpm (95 Lpm)

DOWNLOADS

- ST-2469 Installation Instructions
- SS/ST/SU/WETS/WEUS Fixtures Repair and Maintenance Guide
- Additional Downloads

COMPLIANCES & CERTIFICATIONS

(BREEAM Materials Credit, CalGreen Compliant, CEC Compliant, cUPC Green Certified, EPD, Green Globes Materials & Resources Credit, HPD, LEED Materials & Resources EPD Credit, LEED Materials & Resources HPD Credit, Satisfies LEED Credits, WaterSense Listed)

NOTES

All information contained within this document subject to change without notice.

All vitreous china dimensions shown in these drawings are nominal and not to scale. Dimensions can vary within the tolerances established in the governing ASME A112.19.2/CSA B45.1standard. It is important to consider this when planning rough-in and plumbing layouts.

Static load tested according to the procedure outlined in Section 6.7 of ASME A112.19.2. Not recommended for bariatric use.

Find a compatible flushometer for this water closet.

Sloan 10500 Seymour Ave, Franklin Park, IL 60131
Phone: 800.982.5839 • Fax: 800.447.8329 • sloan.com

ROUGH-IN

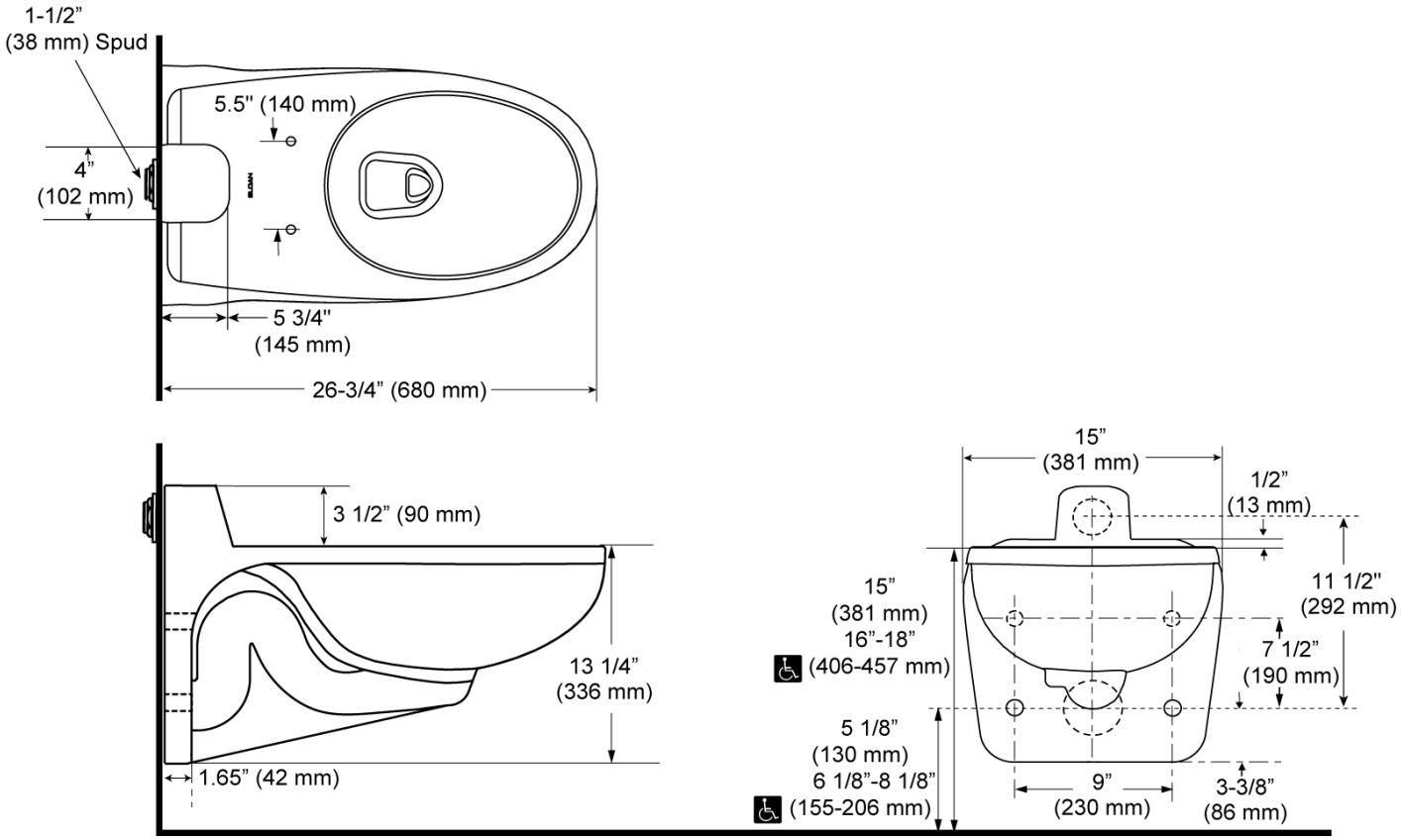

Sloan 10500 Seymour Ave, Franklin Park, IL 60131
Phone: 800.982.5839 • Fax: 800.447.8329 • sloan.com