# ST-2013

Discontinued

## CODE NUMBER

2102013

## DESCRIPTION

Vitreous China Floor-Mounted Water Closet.

## DETAILS

- Flush Volume: 1.6 gpf (6.0 Lpf)
- Flush volume determined by the flushometer used with the fixture
- Rim Height: 15" (381mm)
- Nominal Dimensions: 25 ¼" × 16 1/125" × 15" (641 × 407 × 381mm)

## FEATURES

- White Vitreous China
- Elongated bowl
- Floor mounted, floor outlet
- Siphon jet flushing action achieves 1000g Map score
- Water spot area: 10⅛" x 9⅜" (26 cm x 24 cm)
- 1½ I.P.S. rear spud inlet
- 2⅛" fully glazed trapway
- Closet bolts and caps included
- Toilet seat not included
- Static load rating of 1000 lbs. (See Notes)

## RECOMMENDED SEATS

- Bemis - 1955CT/1955SSCT & 2155CT/2155SSCT
- Church - 295CT/295SSCT & 2155CT/2155SSCT

## DOWNLOADS

- HET Rear Spud Installation Instructions
- SS/ST/SU/WETS/WEUS Fixtures Repair and Maintenance Guide
- Additional Downloads

## ROUGH-IN

## COMPLIANCES & CERTIFICATIONS

(cUPC Certified)

## NOTES

All information contained within this document subject to change without notice.

All vitreous china dimensions shown in these drawings are nominal and not to scale. Dimensions can vary within the tolerances established in the governing ASME A112.19.2/CSA B45.1standard. It is important to consider this when planning rough-in and plumbing layouts.

Static load tested according to the procedure outlined in Section 6.7 of ASME A112.19.2. Not recommended for bariatric use.

Find a compatible flushometer for this water closet.

**Sloan 10500 Seymour Ave, Franklin Park, IL 60131**
Phone: 800.982.5839 • Fax: 800.447.8329 • sloan.com

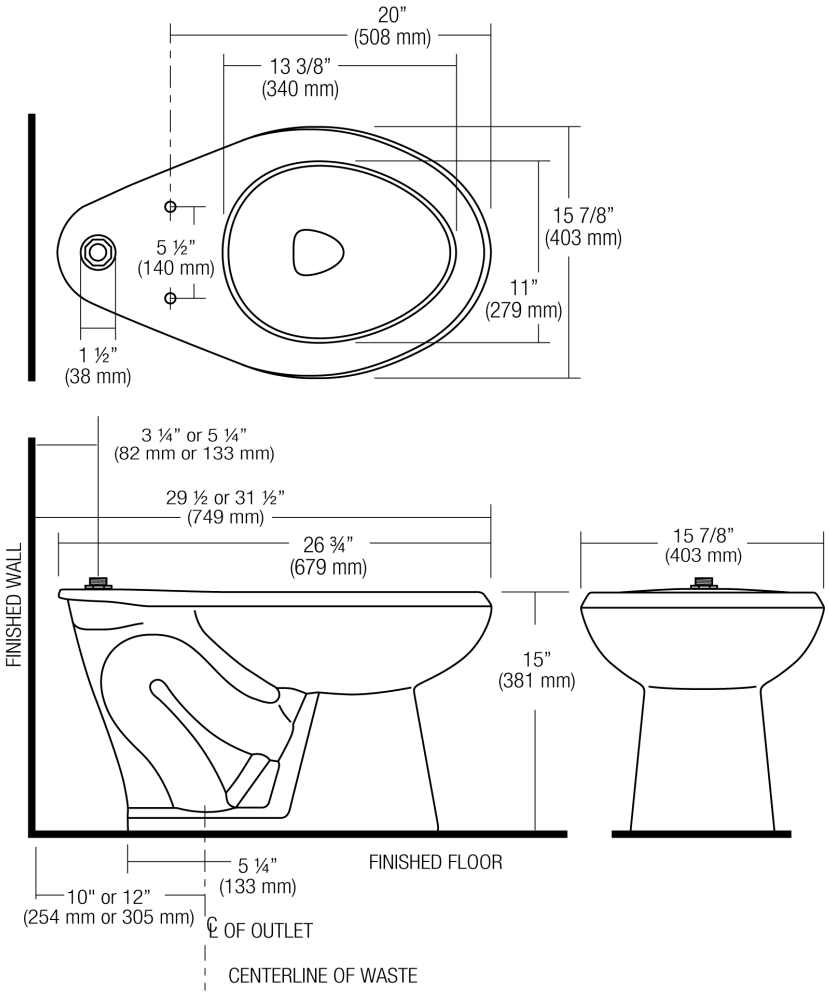


**Sloan 10500 Seymour Ave, Franklin Park, IL 60131**
Phone: 800.982.5839 • Fax: 800.447.8329 • sloan.com