CODE NUMBER

20021303

DESCRIPTION

ST-2009 Water Closet and ECOS 111 Flushometer.

COMPONENTS

- Flushometer: Code 3370420
- Water Closet: Code 2102009

DETAILS

- Flush Volume: 1.6/1.1 gpf (6.0/4.2 Lpf)
- Nominal Dimensions: 26 ¾" × 14" × 15" (679 × 356 × 381mm)

FLUSHOMETER FEATURES

- User friendly three (3) second Flush Delay
- Sweat solder adapter with cover tube and cast wall flange with set screw
- Infrared Sensor with Multiple-focused, Lobular Sensing Fields for high and low target detection
- Fixed Metering Bypass and No External Volume Adjustment to Ensure Water Conservation
- Flex Tube Diaphragm designed for improved life and reduced maintenance
- Engineered Metal Cover with replaceable Lens Window
- Line Powered with 6 VAC Step Down Transformer
- Free Spinning, Vandal Resistant Stop Cap
- Includes 18” electrical cable
- If the user is present for less than one minute and leaves the sensing zone or chooses the small override button, a reduced flush initiates (1.1 gpf/4.2 Lpf) eliminating liquid and paper waste, saving 1/2 gallon of water
- If the user is present for greater than one minute and leaves the zone or chooses the large override button, the full flush initiates (1.6 gpf/6.0 Lpf) eliminating solid waste and paper
- ADA Compliant Sloan ECOS® Electronic Dual Flush Line Powered Infrared Sensor for automatic “No Hands” operation
- 1” I.P.S. Screwdriver Bak-Chek® Angle Stop
- Courtesy Flush® Override Button
- PERMEX® Synthetic Rubber Diaphragm with Linear Filtered Bypass and Vortex Cleansing Action
- Diaphragm, Stop Seat and Vacuum Breaker to be molded from PERMEX® rubber compound for Chloramine resistance

FIXTURE FEATURES

- White Vitreous China
- Elongated bowl
- Floor mounted, floor outlet
- Siphon jet flushing action achieves 1000g Map score when used with any Sloan flushometer
- Water spot area: 10⅛" x 9⅜" (26 cm x 24 cm)
- 1½" I.P.S. top spud inlet
- 2⅛" fully glazed trapway
- Closet bolts and caps included

COMPLIANCES & CERTIFICATIONS

(BREEAM Water Credit, Green Globes Water Credit)

DOWNLOADS

- Optima Sensor Activated Royal Installation Instructions
- SS/ST/SU/WETS/WEUS Fixtures Repair and Maintenance Guide
- Additional Downloads

NOTES

All information contained within this document subject to change without notice.

Static load tested according to the procedure outlined in Section 6.7 of ASME A112.19.2. Not recommended for bariatric use.

Sloan 10500 Seymour Ave, Franklin Park, IL 60131
Phone: 800.982.5839 • Fax: 800.447.8329 • sloan.com

- Toilet seat not included
- Static load rating of 1000 lbs. (See Notes)

ROUGH-IN

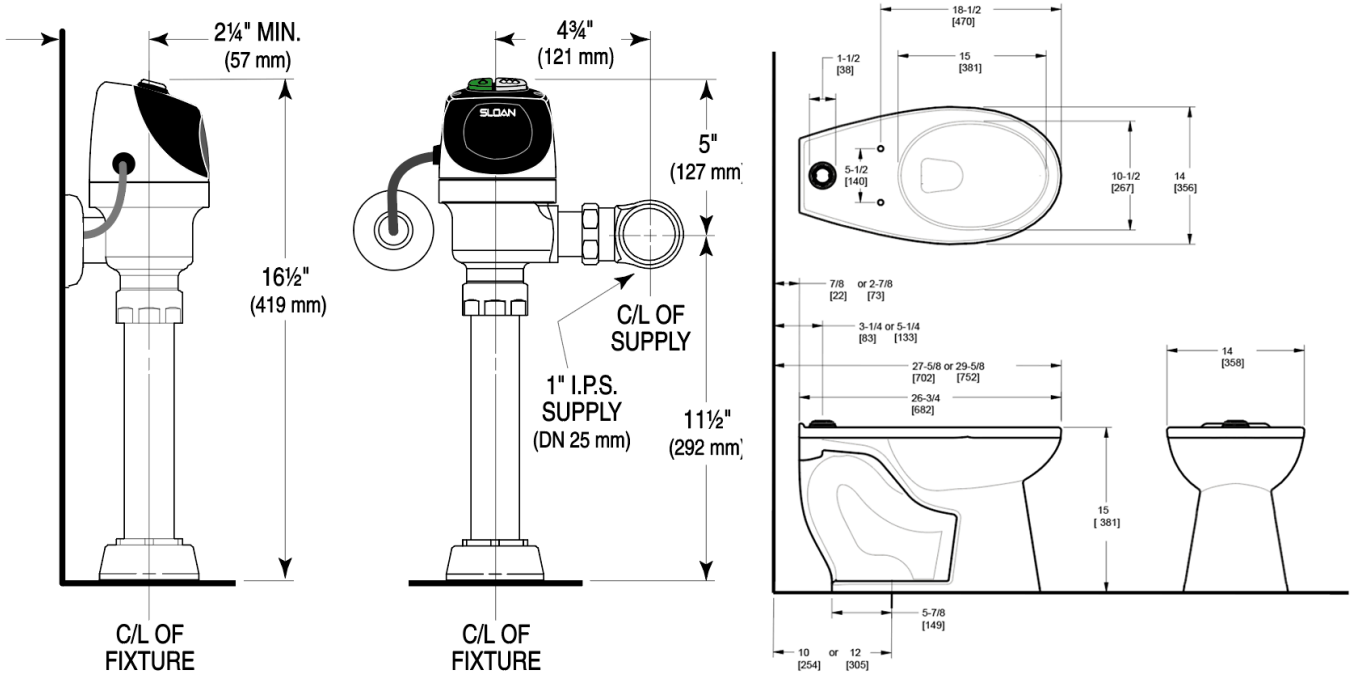

Sloan 10500 Seymour Ave, Franklin Park, IL 60131
Phone: 800.982.5839 • Fax: 800.447.8329 • sloan.com