DESCRIPTION

SloanStone® 2-Station Wall-Mounted Counter Top Sink.

DETAILS

- Material: SloanStone
- Width: 60" (1,524mm)
- Thickness: 0.5

FEATURES

Double Station Lavatory System with Sloan Sensor Operated, Chrome Plated Hand Washing Faucets with the following features:

- Lavatory constructed of Non-porous SloanStone Solid Surface Material
- Integral overflow drainage system
- 1¼" pop-up or flat strainer drain (by others)
- Sloan Optima Sensor Operated Faucets for hands free operation
- Lavatory System is shipped pre-plumbed with Sloan Electronic Controls for easy installation

COLORS

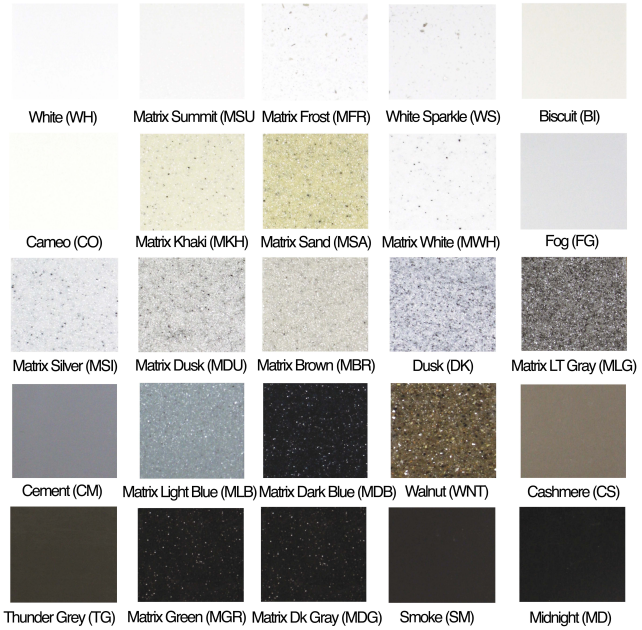

COMPLIANCES & CERTIFICATIONS

IGC156

(ADA Compliant, cUPC Certified, IGC156)

RECOMMENDED SPECIFICATION

SloanStone Series Sink model no. ELC 7X000 Countertop Style Sink. Product to be molded using SloanStone solid surface. Sloan automated sensor faucet. Sloan sensor operated foam soap dispenser. Sink design to be ADA compliant and IAPMO certified. Supplied with angle brackets.

DOWNLOADS

- ELB/ELC Installation Instructions
- ELB/ELC (Spanish) Installation Instructions
- ELC-40000/70000 Series Repair and Maintenance Guide
- Additional Downloads

NOTES

All information contained within this document subject to change without notice.

Looking for other variations of the ELC-72000 product? View the general spec sheet with all options.

Find a compatible faucet for this sink.
Find a matching soap dispenser for this sink.

Sloan 10500 Seymour Ave, Franklin Park, IL 60131
Phone: 800.982.5839 • Fax: 800.447.8329 • sloan.com

Downloaded 04/14/22 • 09/04/18 • View Latest Version

SUGGESTED FAUCETS

	Name	Description
	EAF-100	View more info
	EAF-150	View more info

SUGGESTED SOAP DISPENSERS

	Name	Description
	ESD-1500	View more info

Sloan 10500 Seymour Ave, Franklin Park, IL 60131
Phone: 800.982.5839 • Fax: 800.447.8329 • sloan.com

Downloaded 04/14/22 • 09/04/18 • View Latest Version

ROUGH-IN

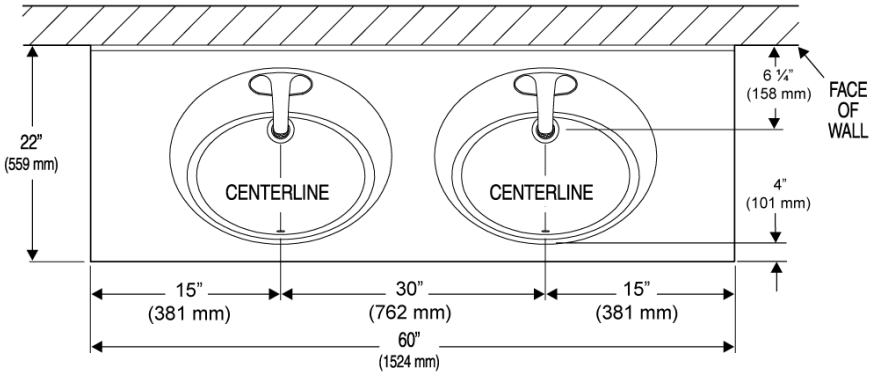

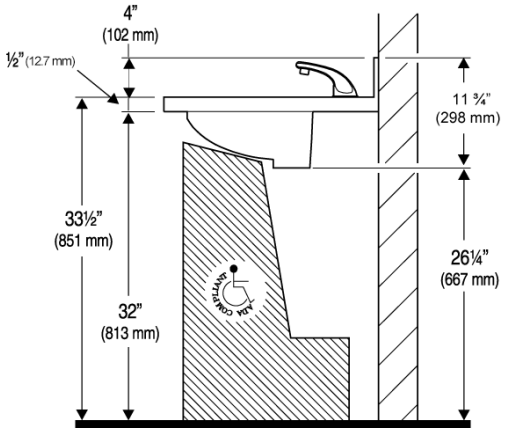

Sloan 10500 Seymour Ave, Franklin Park, IL 60131
Phone: 800.982.5839 • Fax: 800.447.8329 • sloan.com

Downloaded 04/14/22 • 09/04/18 • View Latest Version