CODE NUMBER

10001420

DESCRIPTION

SU-1009 Urinal and SLOAN 186 SFSM Flushometer.

COMPONENTS

- Flushometer: Code 3782688
- Urinal: Code 1101009

DETAILS

- Flush Volume: 0.125 gpf (0.5 Lpf)
- Nominal Dimensions: 14 ¼" × 17 ¼" × 25 ½" (362 × 438 × 648mm)

FLUSHOMETER FEATURES

- PERMEX® high-efficiency synthetic rubber diaphragm with dual linear filtered bypass
- Four (4) size C alkaline batteries included
- “Low Battery” Flashing LED
- “User in View” Flashing LED
- No External Volume Adjustment to Ensure Water Conservation
- True Mechanical Override Flush Button
- 72-Hour Sentinel Flush
- Sweat Solder Adapter w/Cover Tube and Cast Wall Flange with Set Screw
- Stop Seat and Vacuum Breaker Molded from PERMEX® Rubber Compound for Chloramine resistance
- 3/4” IPS screwdriver Bak-Chek® angle stop with vandal resistant stop cap

FIXTURE FEATURES

- White Vitreous China
- Washdown flushing action
- Integral flushing rim
- ¾" I.P.S. top spud inlet
- 2" NPT outlet flange
- Vandal resistant strainer assembly included
- All mounting hardware included
- 100% factory flush tested

COMPLIANCES & CERTIFICATIONS

(ADA Compliant, BAA Compliant, BREEAM Water Credit, CalGreen Compliant, CEC Compliant, cUPC Green Certified, Green Globes Water Credit, LEED V4 Water Efficiency Credit, Satisfies LEED Credits)

DOWNLOADS

- Standard Spud Urinal Installation Instructions
- SS/ST/SU/WETS/WEUS Fixtures Repair and Maintenance Guide
- Additional Downloads

NOTES

All information contained within this document subject to change without notice.

Sloan 10500 Seymour Ave, Franklin Park, IL 60131
Phone: 800.982.5839 • Fax: 800.447.8329 • sloan.com

ROUGH-IN

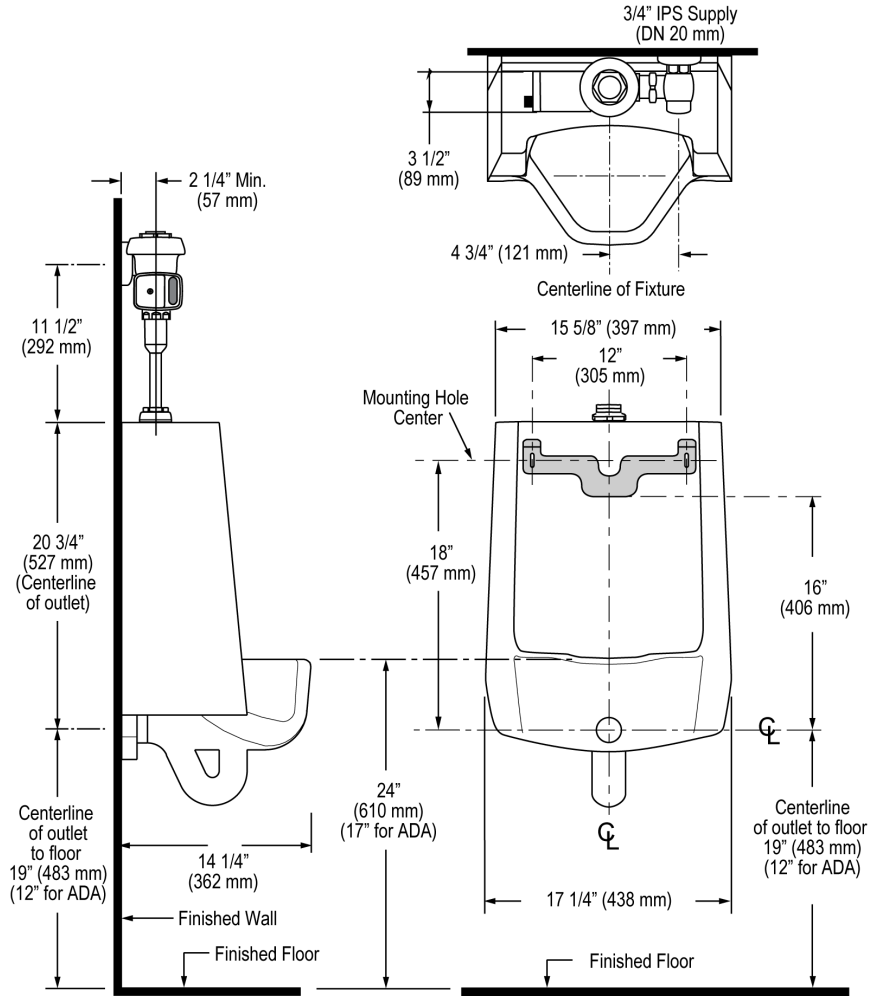

Sloan 10500 Seymour Ave, Franklin Park, IL 60131
Phone: 800.982.5839 • Fax: 800.447.8329 • sloan.com