MECHANICAL FAUCETS

SH-PB1-14-032

Tub and Shower Fittings

Product Type

Wall Mounted Pressure Balancing Pressure Balancing Tub and Shower Valve with Shower Head

Features & Specifications

• Pressure Balancing
• Pressure Balancing Tub and Shower Valve Only
• 2.0 GPM (7.6 L/min) Wall Mounted Institutional Shower Head
• 1.5 GPM Max. Flow Rate @ 80 PSI Hand Spray
• Pressure Balancing Valve Cartridge
• 1/2" Nominal Copper and 1/2" NPT Hot and Cold Supply Inlets and Outlets
• Shower Valve Cycles from Cold to Hot
• Embossed and Color Coded Indexing on Wall Plate
• Integral Service Stops with Checks to Prevent Cross Flow
• Diverter Valve with Indexed Wall Flange Designed to Alternate between Shower Head and Hand Spray
• Wall Elbow with In-Line Vacuum Breaker
• 59" Stainless Steel Hose and Hand Spray with Pause Control
• 48" Wall Mounted Slide Bar with Hand Spray Holder

Performance Specification

• Rated Operating Pressure: 20-125 PSI
• Rated Operating Temperature: 40-120ºF

Warranty

• Lifetime Limited Faucet Warranty
• 5-Year Limited Cartridge Warranty
• 1-Year Limited Finish Warranty

Codes & Standards

• ASME A112.18.1/CSA B125.1
• ASSE 1016
• ADA ANSI/ICC A117.1

Job Name _____

Item Number _____

Section/Tag _____

Model Specified _____

Architect _____

Engineer _____

Contractor _____

[ ] Submitted as Shown [ ] Submitted with Variations

Date _____

2100 South Clearwater Drive
Des Plaines, IL
P: 847/803-5000
F: 847/803-5454
Technical: 800/TEC-TRUE
www.chicagofaucets.com

SH-PB1-14-032

Tub and Shower Fittings

Architect/Engineer Specification

Chicago Faucets No. SH-PB1-14-032, Tub and Shower System with pressure balancing valve and shower head, wall-mounted. Chrome plated. Institutional shower head, wall-mounted, 2.0 GPM max. flow rate @ 80 PSI. Hand spray, 1.5 GPM max. flow rate @ 80 PSI. Includes pressure balancing cartridge. 1/2" nominal copper and 1/2" NPT hot and cold supply inlets and outlets. Shower valve cycles from cold to hot. Wall plate includes embossed and color-coded temperature index. Integral service stops with checks to prevent cross-flow. Diverter valve with indexed wall flange, diverts water flow between shower head and hand spray. Includes wall elbow and in-line vacuum breaker. Hand spray with 59" stainless steel hose and pause control. 48" wall-mounted slide bar with hand spray holder. This product meets ADA ANSI/ICC A117.1 requirements and is tested and certified to industry standards: ASME A112.18.1/CSA B125.1, and ASSE 1016.

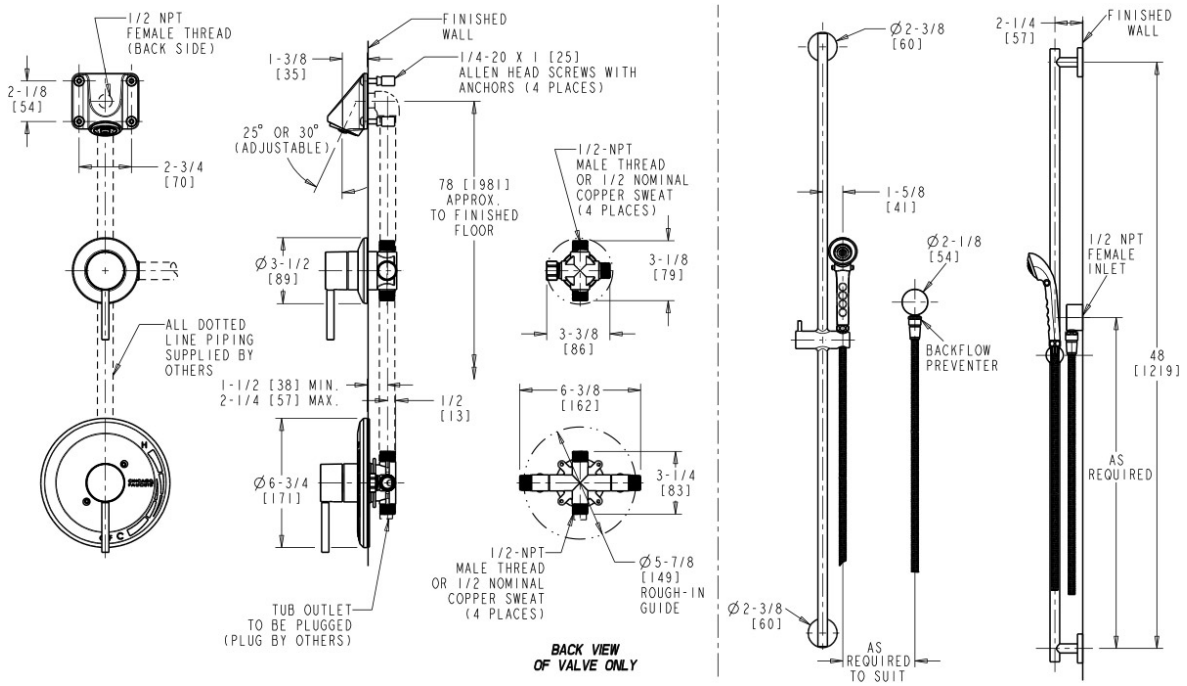

Operation and Maintenance

Installation should be in accordance with local plumbing codes. Flush all pipes thoroughly before installation. After installation, remove spout outlet or flow control and flush faucet thoroughly to clear any debris. Care should be taken when cleaning the product. Do not use abrasive cleaners, chemicals or solvents as they can result in surface damage. Use mild soap and warm water for cleaning and protecting the life of Chicago Faucet products. For specific operation and maintenance refer to the installation instructions and repair parts documents that are located at www.chicagofaucets.com.

Chicago Faucets, member of the Geberit Group, is the leading brand of commercial faucets and fittings in the United States, offering a complete range of products for schools, laboratories, hospitals, office buildings, food service, airports and sport facilities. Call 1.800.TECTRUE or 1.847.803.5000 Option 1 for installation or other technical assistance.

2100 South Clearwater Drive
Des Plaines, IL
P: 847/803-5000
F: 847/803-5454
Technical: 800/TEC-TRUE
www.chicagofaucets.com