MECHANICAL FAUCETS

537-WCNF

Washdown and Sill

Product Type

Wall Mounted Single Hole Hose Reels Hose Reel Assembly with Cover

Features & Specifications

- Single Hole Hose Reels
- 2.5 GPM @ 60 PSI
- 3/8" NPT Female Thread Inlet
- Retractable 35 Ft. x 3/8" I.D. Rubber Hose
- CFNow! Item Ships in 3 Days

Performance Specification

- Rated Operating Pressure: 20-125 PSI
- Rated Operating Temperature: 40-140 ºF

Warranty

- Lifetime Limited Faucet Warranty
- 5-Year Limited Cartridge Warranty
- 1-Year Limited Finish Warranty

Codes & Standards

- ASME A112.18.1/CSA B125.1

Job Name _____

Item Number _____

Section/Tag _____

Model Specified _____

Architect _____

Engineer _____

Contractor _____

[ ] Submitted as Shown [ ] Submitted with Variations

Date _____

2100 South Clearwater Drive
Des Plaines, IL
P: 847/803-5000
F: 847/803-5454
Technical: 800/TEC-TRUE
www.chicagofaucets.com

537-WCNF

Washdown and Sill

Architect/Engineer Specification

Chicago Faucets No. 537-WCNF, Hose Reel Assembly, covered, wall-mounted. Spray valve 2.5 GPM @ 60 PSI. 3/8" NPT female thread inlet. Retractable rubber hose, 35 ft. x 3/8" I.D.

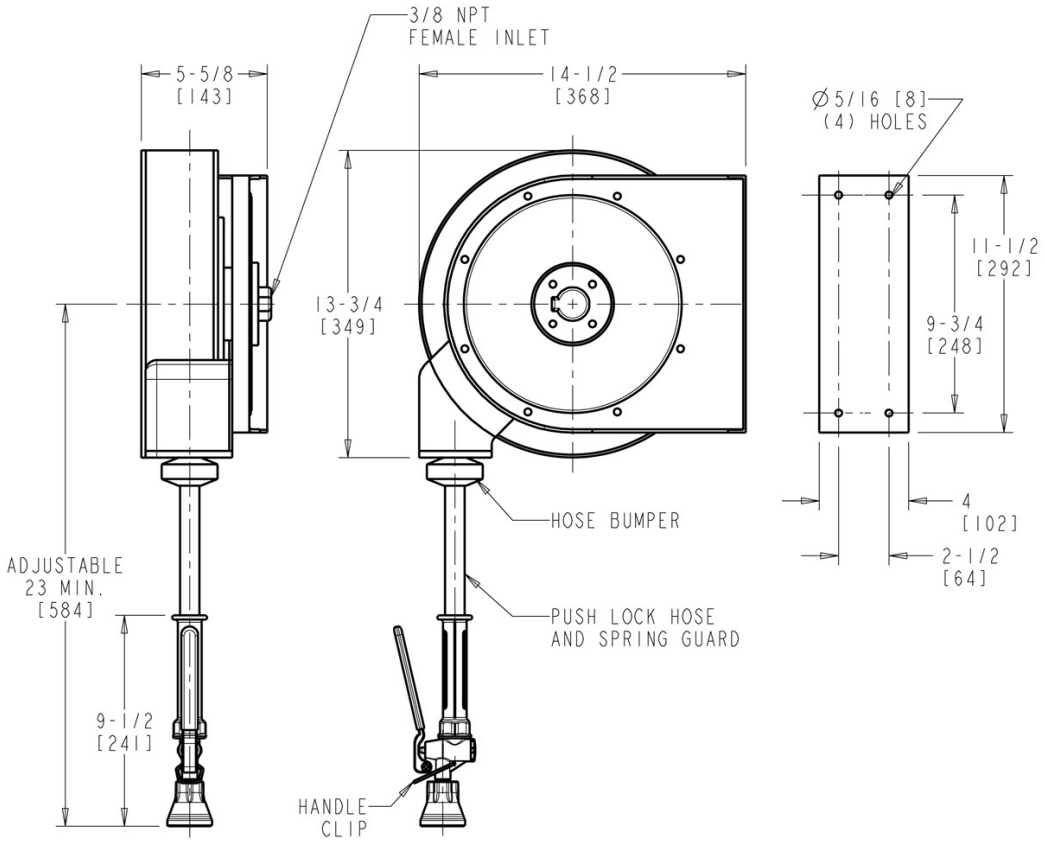

Operation and Maintenance

Installation should be in accordance with local plumbing codes. Flush all pipes thoroughly before installation. After installation, remove spout outlet or flow control and flush faucet thoroughly to clear any debris. Care should be taken when cleaning the product. Do not use abrasive cleaners, chemicals or solvents as they can result in surface damage. Use mild soap and warm water for cleaning and protecting the life of Chicago Faucet products. For specific operation and maintenance refer to the installation instructions and repair parts documents that are located at www.chicagofaucets.com.

Chicago Faucets, member of the Geberit Group, is the leading brand of commercial faucets and fittings in the United States, offering a complete range of products for schools, laboratories, hospitals, office buildings, food service, airports and sport facilities. Call 1.800.TECTRUE or 1.847.803.5000 Option 1 for installation or other technical assistance.

2100 South Clearwater Drive
Des Plaines, IL
P: 847/803-5000
F: 847/803-5454
Technical: 800/TEC-TRUE
www.chicagofaucets.com